Bimetal thermometer with switch contacts
Model 55, stainless steel version

WIKA data sheet TV 25.01

for further approvals
see page 10

Applications

- Control and regulation of industrial processes
- Monitoring of plants and switching of circuits
- Chemical industry, petrochemical industry, process technology and food industry
- For aggressive media

Special features

- High reliability and long service life
- Universal application
- Case and stem from stainless steel
- Instruments with inductive contacts for use in hazardous areas with ATEX approval
- Instruments with electronic contact for PLC applications

Bimetal thermometer with switch contacts, model 55

Description

Wherever the process temperature has to be indicated locally and, at the same time, circuits need to be switched, the bimetal thermometer with switch contacts finds its use.

Switch contacts (electrical alarm contacts) make or break an electric control circuit dependent upon the position of the instrument pointer. The switch contacts are adjustable over the full measuring range. The instrument pointer actual value pointer) moves freely across the entire scale range, independent of the setting.

The set pointer can be adjusted via the window using a removable adjustment key (mounted on the cable terminal box).

Switch contacts consisting of several contacts can also be set to a single set point. Contact actuation is made when the actual value pointer travels beyond or below the desired set point.

As switch contacts, inductive contacts – for requirements to ATEX – or electronic contacts for triggering a PLC are available.

For further information on the different switch contacts please see data sheet AC 08.01.

Data sheets showing similar products and accessories:
Electrical switch contacts; model 8xx; see data sheet AC 08.01

Standard version

Measuring element
Bimetal coil

Nominal size in mm
100

Connection designs
S Standard (threaded connection) [1)]
1 Plain stem (without thread)
2 Male nut
3 Union nut
4 Compression fitting (sliding on stem)
5 Union nut and loose threaded connection

1) Not for version “adjustable stem and dial”

Model overview

Model	Version
55	Back mount (axial)
	Lower mount (radial)
	Back mount, adjustable stem and dial

Accuracy class
DIN 16196

Working range
Normal (1 year): Measuring range (DIN 16196)
Short time (24 h max.): Scale range (DIN 16196)

Case and bayonet ring
Stainless steel 1.4301

Stem and process connection
Stainless steel 1.4571

Dial
Aluminium white, black lettering

Window
Instrument glass

Pointer
Aluminium, black, adjustable pointer

Electrical connection
Cable terminal box

Permissible operating pressure at the stem
max. 25 bar, static

Permissible ambient temperature at case
-20 ... +60 °C (others on request)

Temperature limits for storage and transport
-20 ... +60 °C (EN 13190)

Ingress protection
IP65 per IEC/EN 60529

Switch contacts

Inductive contact model 831
- Long service life due to non-contact sensor
- Additional control unit required
- With corresponding control unit suitable for use in zone 1 / 21 (2 GD) hazardous areas
- Low influence on the indication accuracy
- Fail-safe switching at high switching frequency
- Insensitive to corrosion
- Up to 2 switch contacts per measuring instrument

Electronic contact model 830 E
- For direct triggering of a programmable logic controller (PLC)
- No additional control unit required
- Long service life due to non-contact sensor
- Low influence on the indication accuracy
- Fail-safe switching at high switching frequency
- Insensitive to corrosion
- Up to 2 switch contacts per measuring instrument

Switching function
The switching function of the switch is indicated by index 1 or 2.
Model 8xx.1: Normally open (clockwise pointer motion)
Model 8xx.2: Normally closed (clockwise pointer motion)

For further information see data sheet AC 08.01, electrical switch contacts

Options

- Scale range °F, °C/°F (dual scale)
- Laminated safety glass, clear non-splintering plastic
- Stem Ø 6, 10, 12 mm
- Special measuring ranges or dial printing to customer specifications (on request)
- Inductive contacts also in safety version
- Case and bayonet ring stainless steel 1.4571
- Design per ATEX Ex II 2 GD c TX

Scale range, measuring range, error limit (DIN 16196)
Scale graduation per WIKA standard

Scale range in °C	Scale spacing in °C	Measuring range [1] in °C	Error limit in °C	
			Class 1	Class 2
-70 ... +30	1	-60 ... +20	1.5	3.0
-50 ... +50	1	-40 ... +40	1.5	3.0
-30 ... +50	1	-20 ... +40	1.5	3.0
-20 ... +60	1	-10 ... +50	1.5	3.0
0 ... 60	1	10 ... 50	1.5	3.0
0 ... 80	1	10 ... 70	1.5	3.0
0 ... 100	1	10 ... 90	1.5	3.0
0 ... 120	2	10 ... 110	3.0	6.0
0 ... 160	2	20 ... 140	3.0	6.0
0 ... 200	2	20 ... 180	3.0	6.0
0 ... 250	5	30 ... 220	3.75	7.0
0 ... 300	5	30 ... 270	7.5	15.0
0 ... 400	5	50 ... 350	7.5	15.0
0 ... 500	5	50 ... 450	7.5	15.0
0 ... 600	10	100 ... 500	15.0	30.0

1) The measuring range is indicated on the dial by two triangular marks. Only within this range is the stated error limit valid per DIN 16196.

Please indicate switch points!
Unless otherwise specified, the instrument will be delivered with the adjustable switching points factory-set as follows:

- Single contact Start of measuring range
- Double contact Start and end of the measuring range

Accuracy

Stem diameter	Accuracy class [2]	
	With single contact	With double contact
6 mm	Class 2	Class 2
8 mm	Class 1	Class 2
≥ 10 mm	Class 1	Class 1

2) Adjustable stem and dial version only available in class 2

Specifications for switch contacts

Inductive contact model 831

Scale ranges	all
Nominal size in mm	100
Number of contacts	max. 2
Nominal voltage	8 V = (RI = 1 kΩ)
Operating voltage	DC 5 ... 25 V
Current supply	≥ 3 mA (measuring plate not detected) ≥ 1 mA (measuring plate detected)

The adjustment range of the contacts is 0 ... 100 % of the scale.

Associated isolating amplifiers and control units

Model	Number of contacts	Ex version
904.28 KFA6 - SR2 - Ex1.W	1	yes
904.29 KFA6 - SR2 - Ex2.W	2	yes
904.30 KHA6 - SH - Ex1	1	yes - safety equipment
904.25 MSR 010-I	1	no
904.26 MSR 020-I	2	no
904.27 MSR 011-I	Two-point control	no

Electronic contact model 830 E

Scale ranges	all
Nominal size in mm	100
Number of contacts	max. 2
Range of operating voltage	DC 10 ... 30 V
Residual ripple	max. 10 %
No-load current	≤ 10 mA
Switching current	≤ 100 mA
Residual current	≤ 100 µA
Function of switching element	Normally open
Type of output	PNP transistor
Voltage drop (with I_{max})	≤ 0.7 V
Reverse polarity protection	conditional U_B (the output 3 or 4 switch must never be set directly to minus)
Anti-inductive protection	1 kV, 0.1 ms, 1 kΩ
Oscillator frequency	approx. 1,000 kHz
EMC	per EN 60947-5-2
Temperature	T_{amb} -20 ... +60 °C T_{med} -20 ... +200 °C

The adjustment range of the contacts is 0 ... 100 % of the scale.

Electrical standard connections [1)]

For instruments with switch contacts and a max. of 2 contacts, front view:

Cable terminal box from PA 6, black
Temperature resistance -40 ... +80 °C, per VDE 0110
M20 x 1.5 cable gland (facing downwards), strain relief,
6 screw terminals + PE for conductor cross-section up to
1.5 mm², fitted on the right-hand side of the case

1) Applies to all contacts

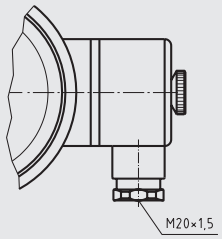

Only use cable with a diameter of 7 ... 13 mm

1346210y

Connection designs

Standard design (male thread connection) [2)]

G ½ B, G ¾ B, ½ NPT, ¾ NPT
Insertion length l_1 = 63, 100, 160, 200, 250 mm

Nominal size	Process connection		Dimensions in mm		
NS	G	i	SW	Ø d_4	Ø d
100	G ½ B	14	27	26	8
	G ¾ B	16	32	32	8
	½ NPT	19	22	-	8
	¾ NPT	20	30	-	8

2) Not for version “adjustable stem and dial”

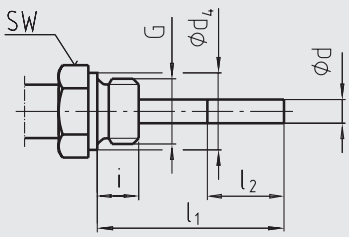

3073050.05

Legend:

G	Male thread	SW	Spanner width
i	Thread length	Ø d	Stem diameter
Ø d_4	Diameter of the sealing collar	l_2	Active length

Design 1, plain stem (without thread)

Insertion length l_1 = 140, 200, 240, 290 mm

Nominal size	Dimensions in mm			
NS	d_1	Ø d	a for axial	a for adjustable stem and dial
100	18	8	15	25

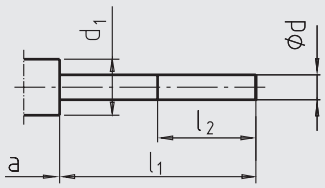

3073050.05

Legend:

a	Distance to the case/ articulated joint	Ø d	Stem diameter
Ø d_1	Collar diameter	l_2	Active length

Design 2, male nut
Insertion length l_1 = 80, 140, 180, 230 mm

Nominal size	Process connection		Dimensions in mm	
NS	G	i	SW	Ø d
100	G ½ B	20	27	8

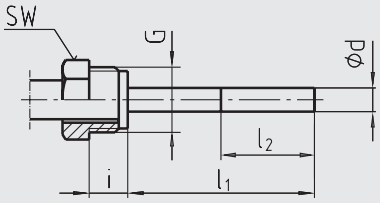

3073050.05

Legend:
G Male thread
i Thread length incl. collar
SW Spanner width
Ø d Stem diameter
l_2 Active length

Design 3, union nut
Insertion length l_1 = 89, 126, 186, 226, 276 mm

Nominal size	Process connection		Dimensions in mm	
NS	G	i	SW	Ø d
100	G ½ B	8.5	27	8
	G ¾ B	10.5	32	8
	M24 x 1.5	13.5	32	8

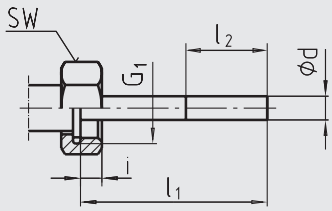

3073050.05

Legend:
G_1 Female thread
i Thread length
SW Spanner width
Ø d Stem diameter
l_2 Active length

Design 4, compression fitting (sliding on stem)
Standard insertion length l_1 = 63, 100, 160, 200, 250 mm
Length L = l_1 + 40 mm

Nominal size	Process connection		Dimensions in mm		
NS	G	i	SW	Ø d_4	Ø d
100	G ½ B	14	27	26	8
	G ¾ B	16	32	32	8
	M18 x 1.5	12	24	23	8
	½ NPT	19	22	-	8
	¾ NPT	20	30	-	8

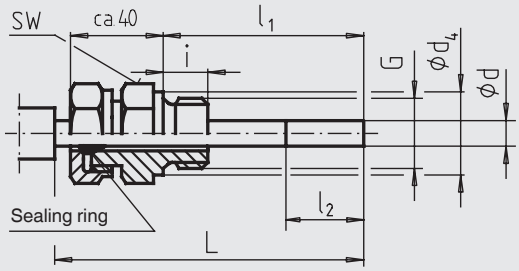

3073050.05

Legend:
G Male thread
i Thread length
Ø d_4 Diameter of the sealing collar
SW Spanner width
Ø d Stem diameter
l_2 Active length

Design 5, union nut and loose threaded connection
G ½ B, G ¾ B, M18 x 1.5
Insertion length l_1 = variable
Length L = l_1 + 40 mm
Stainless steel 1.4571

Nominal size	Process connection		Dimensions in mm		
NS	G	i	SW	Ø d_4	Ø d
100	G ½ B	14	27	26	8
	G ¾ B	16	32	32	8
	M18 x 1.5	12	24	23	8

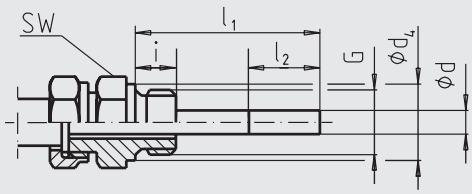

3073050.05

Legend:
G Male thread
i Thread length
Ø d_4 Diameter of the sealing collar
SW Spanner width
Ø d Stem diameter
l_2 Active length

Dimensions in mm

Back mount

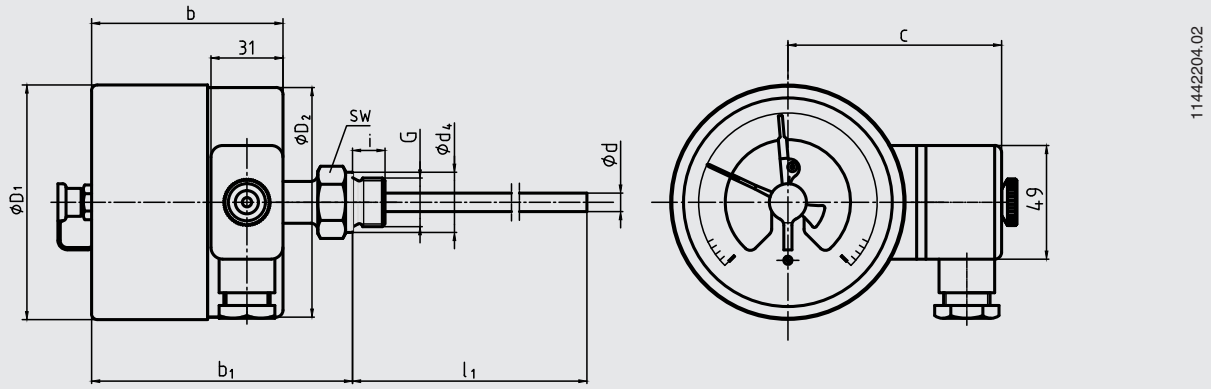

Lower mount

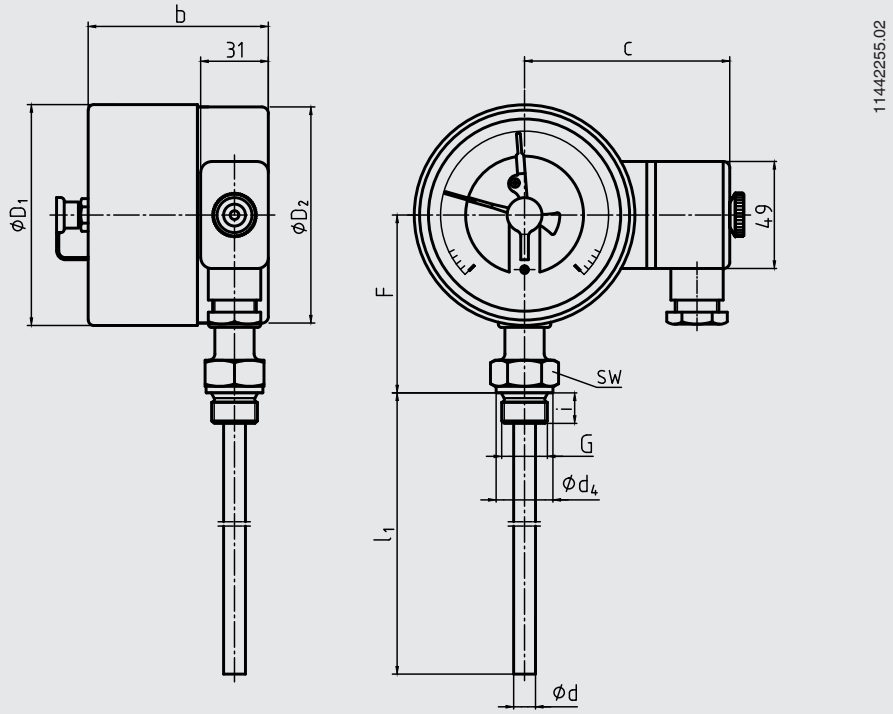

NS	Dimensions in mm									Weight in kg		
	Ø d [2]	Ø d_4	Ø D_1	Ø D_2	F [1]	G	C	d_4	SW	axial	radial	adjustable stem and dial
100	8	26	101	99	83	G ½ B	94	26	27	1.0	1.1	0.7

NS	Dimensions in mm			
	Switch contact model 831		Switch contacts models 831.11 or 831.22	
	1- or 2-way			
	b	b_1 [1]	b	b_1 [1]
100	88	121	88	121

1) With scale ranges ≥ 0 ... 300 °C the dimensions increase by 40 mm
2) Option: Stem Ø 6, 10, 12 mm

Lower mount, with rear cable entry

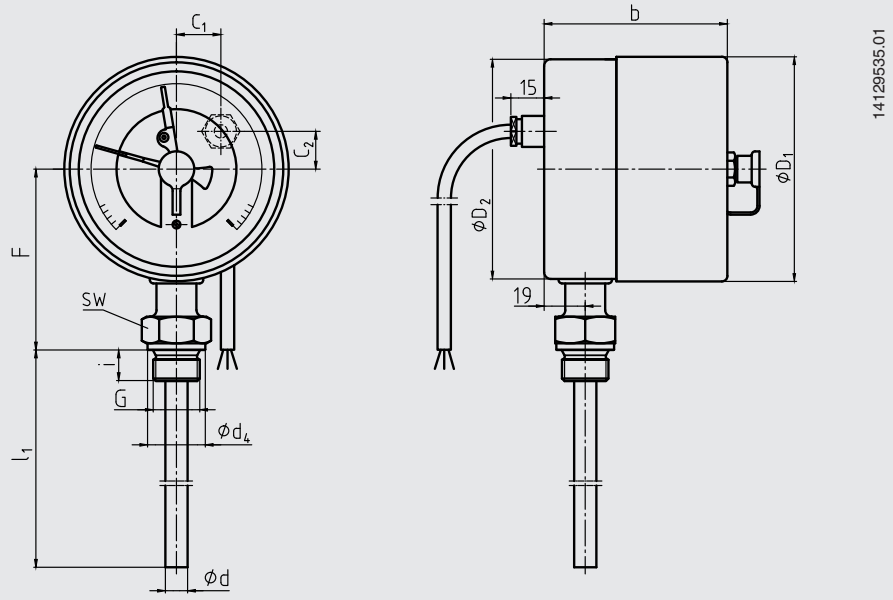

NS	Dimensions in mm										Weight in kg		
	Ø d [2]	Ø d_4	Ø D_1	Ø D_2	F [1]	G	C_1	C_2	i	SW	axial	radial	adjustable stem and dial
100	8	26	101	99	83	G ½ B	20	17	14	27	1.0	1.1	0.7

NS	Dimensions in mm	
	Switch contact model 831	Switch contacts models 831.11 or 831.22
	1- or 2-way	
	b	b
100	88	88

1) With scale ranges ≥ 0 ... 300 °C the dimensions increase by 40 mm
2) Option: Stem Ø 6, 10, 12 mm

Adjustable stem and dial version

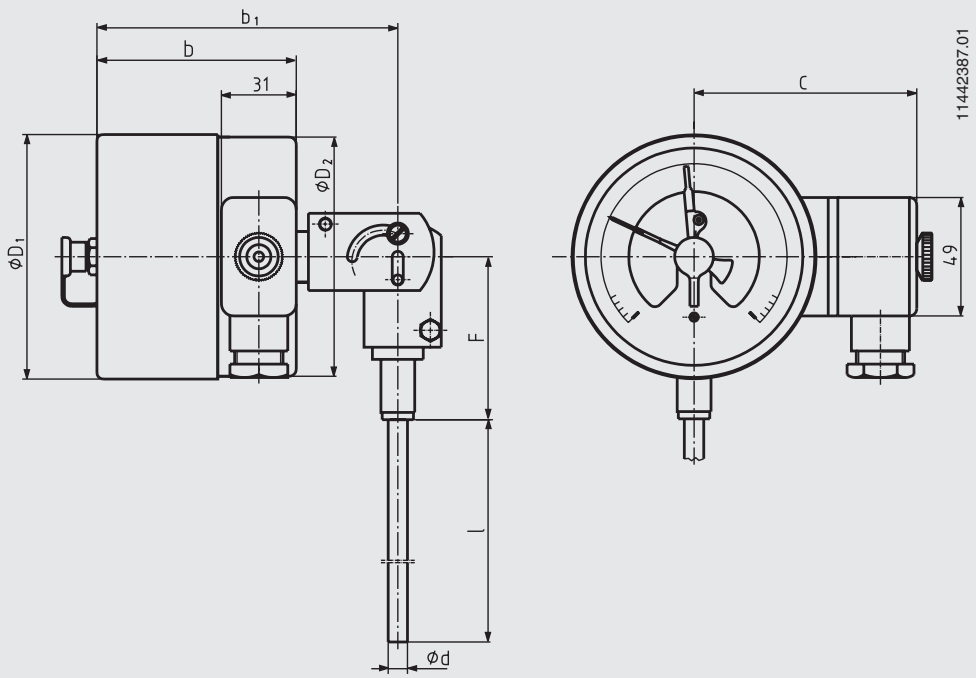

Attention: For this version, a fixed design is not possible.

NS	Dimensions in mm					Weight in kg
	Ø d [2]	Ø D_1	Ø D_2	F	C	
100	8	101	99	68	94	0.7

NS	Dimensions in mm			
	Switch contact model 831		Switch contacts models 831.11 or 831.22	
	1- or 2-way			
	b	b_1	b	b_1
100	88	131	88	131

2) Option: Stem Ø 6, 10, 12 mm

Thermowell

In principle, the operation of a mechanical thermometer is possible without a thermowell with low process-side loading (low pressure, low viscosity and low flow velocities).

However, in order to enable exchanging the thermometer during operation (e.g. instrument replacement or calibration) and to ensure a better protection of the measuring instrument and also the plant and the environment, it is advisable to use a thermowell from the extensive WIKA thermowell portfolio.

For further information on the calculation of the thermowell, see Technical information IN 00.15.

Approvals

Logo	Description	Country
	EU declaration of conformity ■ Low voltage directive ■ RoHS directive ■ ATEX directive (option) Hazardous areas	European Union
	EAC (option) ■ Electromagnetic compatibility ■ Low voltage directive ■ Hazardous areas	Eurasian Economic Community
	GOST (option) Metrology, measurement technology	Russia
	KazInMetr (option) Metrology, measurement technology	Kazakhstan
-	**MTSCHS (option)** Permission for commissioning	Kazakhstan
	BelGIM (option) Metrology, measurement technology	Belarus
	UkrSEPRO (option) Metrology, measurement technology	Ukraine
	Uzstandard (option) Metrology, measurement technology	Uzbekistan
-	**CRN (option)** Safety (e.g. electr. safety, overpressure, ...)	Canada

Certificates (option)

- 2.2 test report
- 3.1 inspection certificate
- DKD/DAkkS calibration certificate

Approvals and certificates, see website

Ordering information

Model / Nominal size / Type of contact and switching function / Scale range / Connection size / Connection location / Options

WIKA Alexander Wiegand SE & Co. KG
Alexander-Wiegand-Straße 30
63911 Klingenberg/Germany
Tel. +49 9372 132-0
Fax +49 9372 132-406
info@wika.com
www.wika.com